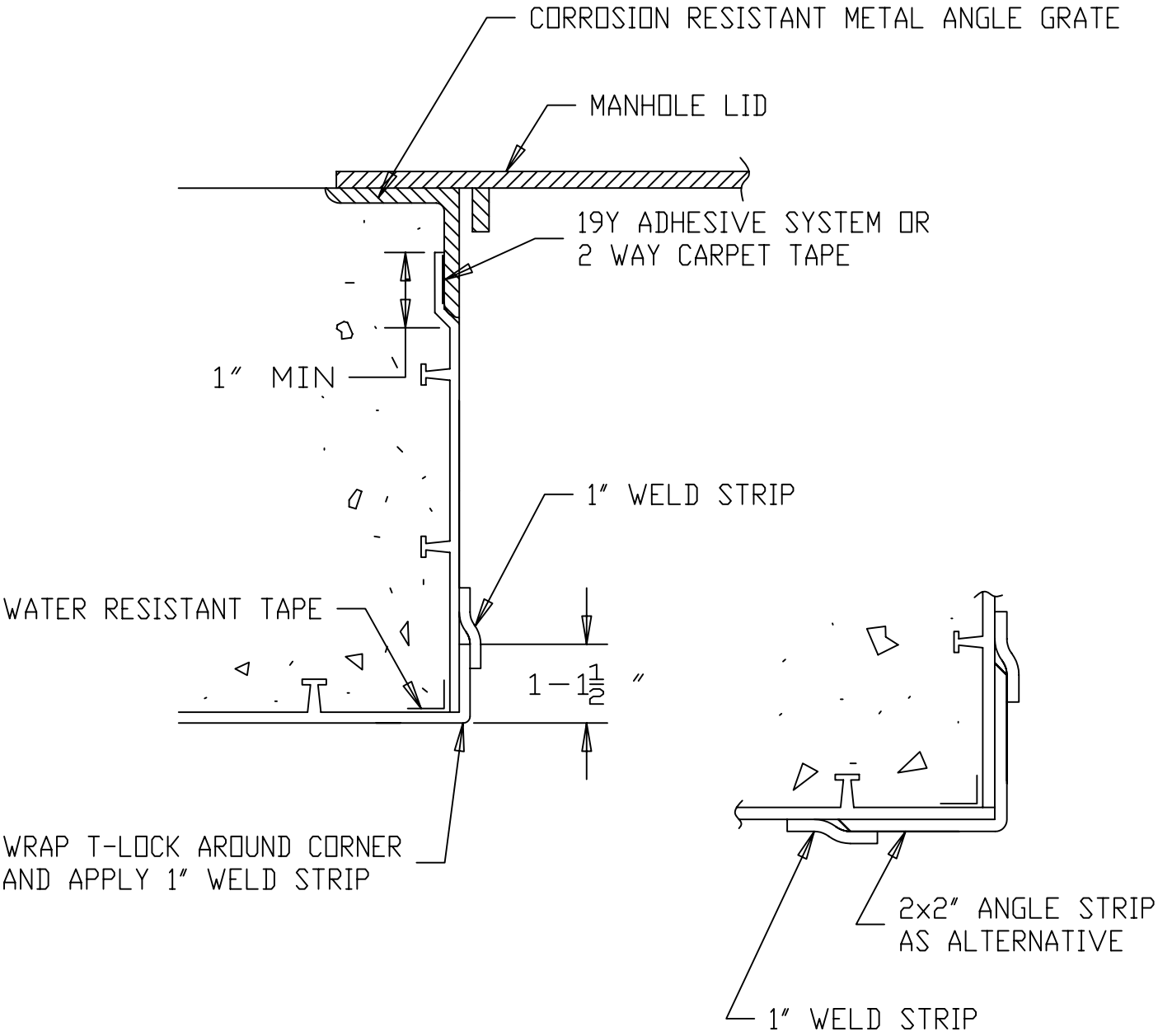

NOTE:

FOR JOINT WELD SEE DETAIL PLD-TL-010

	Ameron PROTECTIVE LINING DIVISION				
	TERMINATION OF T-LOCK IN MANHOLE WITH METAL ANGLE FRAME				
	DRAWN	P.K.	7-86	PLD-TL-051	REV
A REVISED 4-94	APPV'D				A