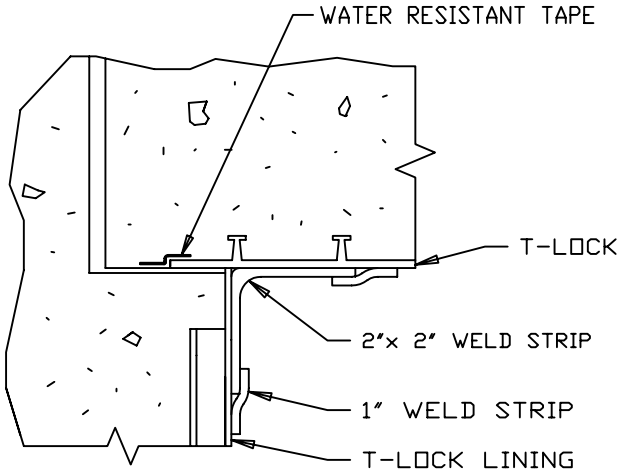

DETAIL 5

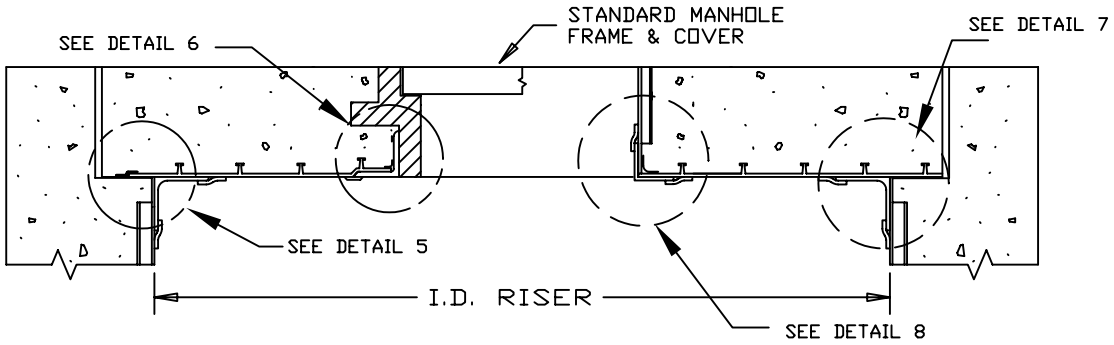

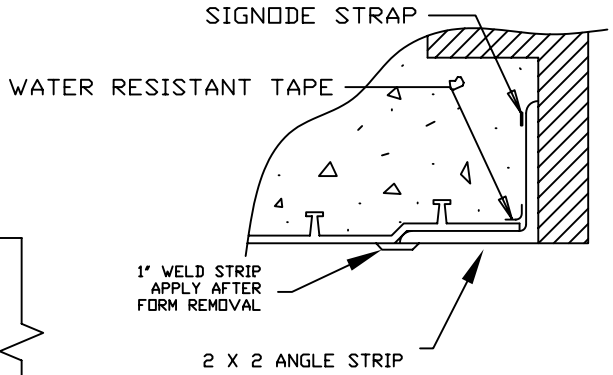

DETAIL 6

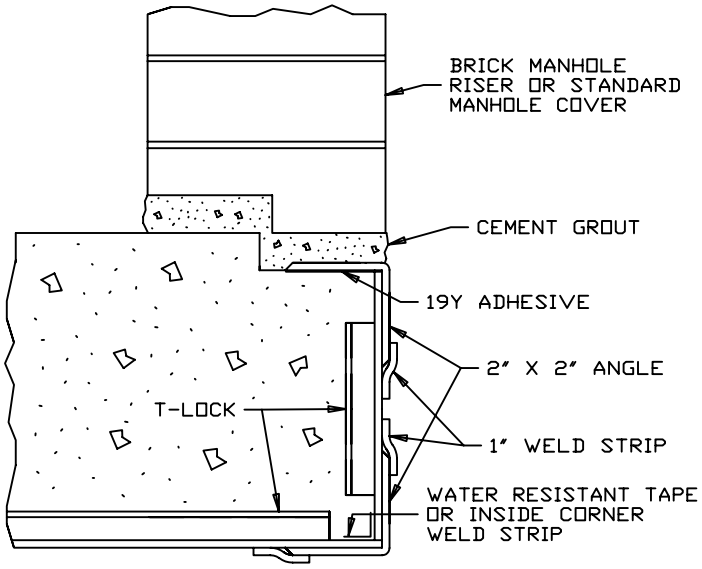

DETAIL 8

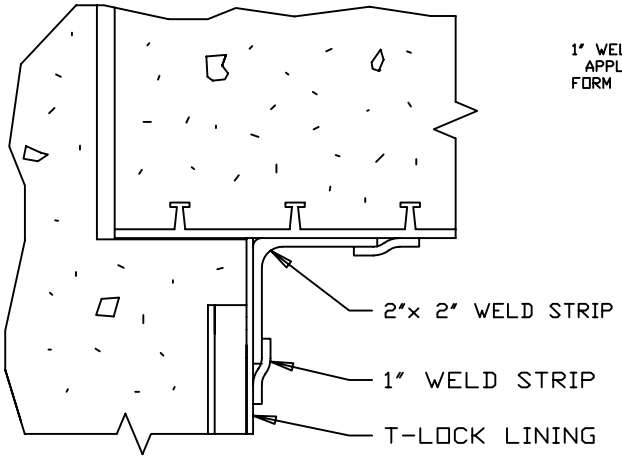

DETAIL 7

Ameron PROTECTIVE LINING DIVISION

AMER-PLATE T-LOCK LINED FLATTOP

SYMBOL	REVISION	DATE	BY	APPV'D
B	ADDED DETAIL 8	03-06	JPG	
A	DRAWING REVISED	4-94	ERT	

DRAWN	P.K.	7-86	PLD-TL-055
APPV'D			

REV B